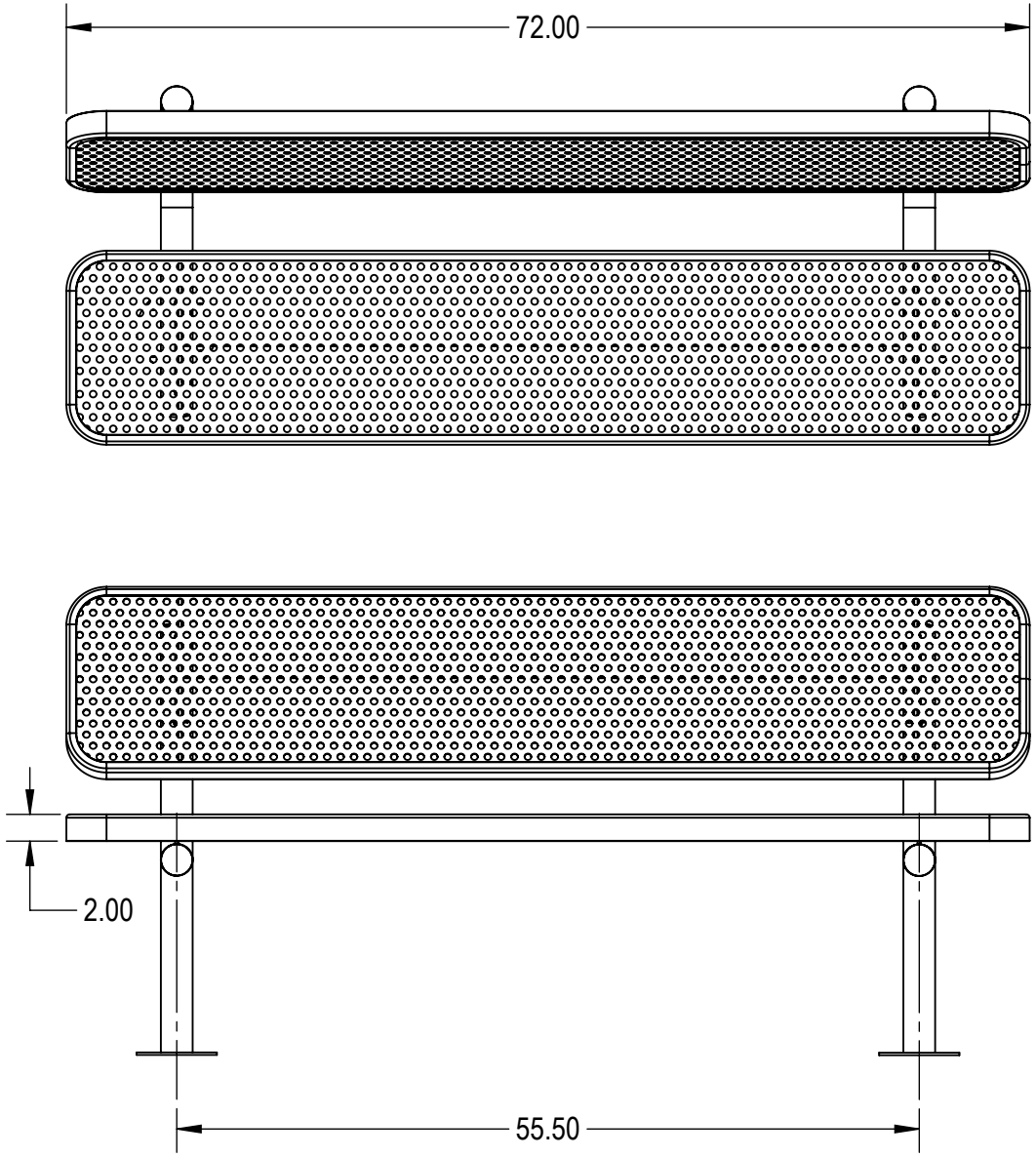

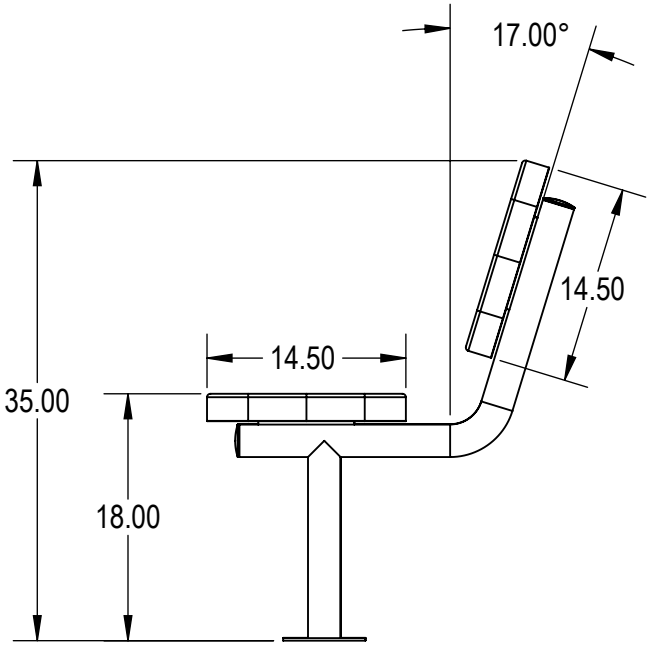

Mfg. by Aadvantage Panels & Fence, Inc.

MyTCOAT

Commercial Outdoor Furniture

www.mytcoat.com

PROPRIETARY AND CONFIDENTIAL

THE INFORMATION CONTAINED IN THIS DRAWING IS THE SOLE PROPERTY OF Aadvantage Panels & Fence, Inc. PO Box 1790 Whitney, TX. ANY REPRODUCTION IN PART OR AS A WHOLE WITHOUT THE WRITTEN PERMISSION OF Aadvantage Panels & Fence, Inc. PO Box 1790 Whitney, TX. IS PROHIBITED.

	NAME	DATE
DRAWN	GM	1/25/2016
SALES APPR.		
CLIENT APPR.		
MFG APPR.		
Q.A.		

Design By -

CADWorksPro
Chicago, IL

www.cadworkspro.com

AAdvantage Panels & Fence, Inc.

TITLE:

6ft Players Bench with Back
Surface Mount - Perforated Metal

SIZE	DWG. NO.	REV
A	BYP06-B-32-000	

WEIGHT:

SHEET 3 OF 3

5 4 3 2 1